Revision: 1	Date: 8/22/03	By: DPB

INFORMATION ONLY

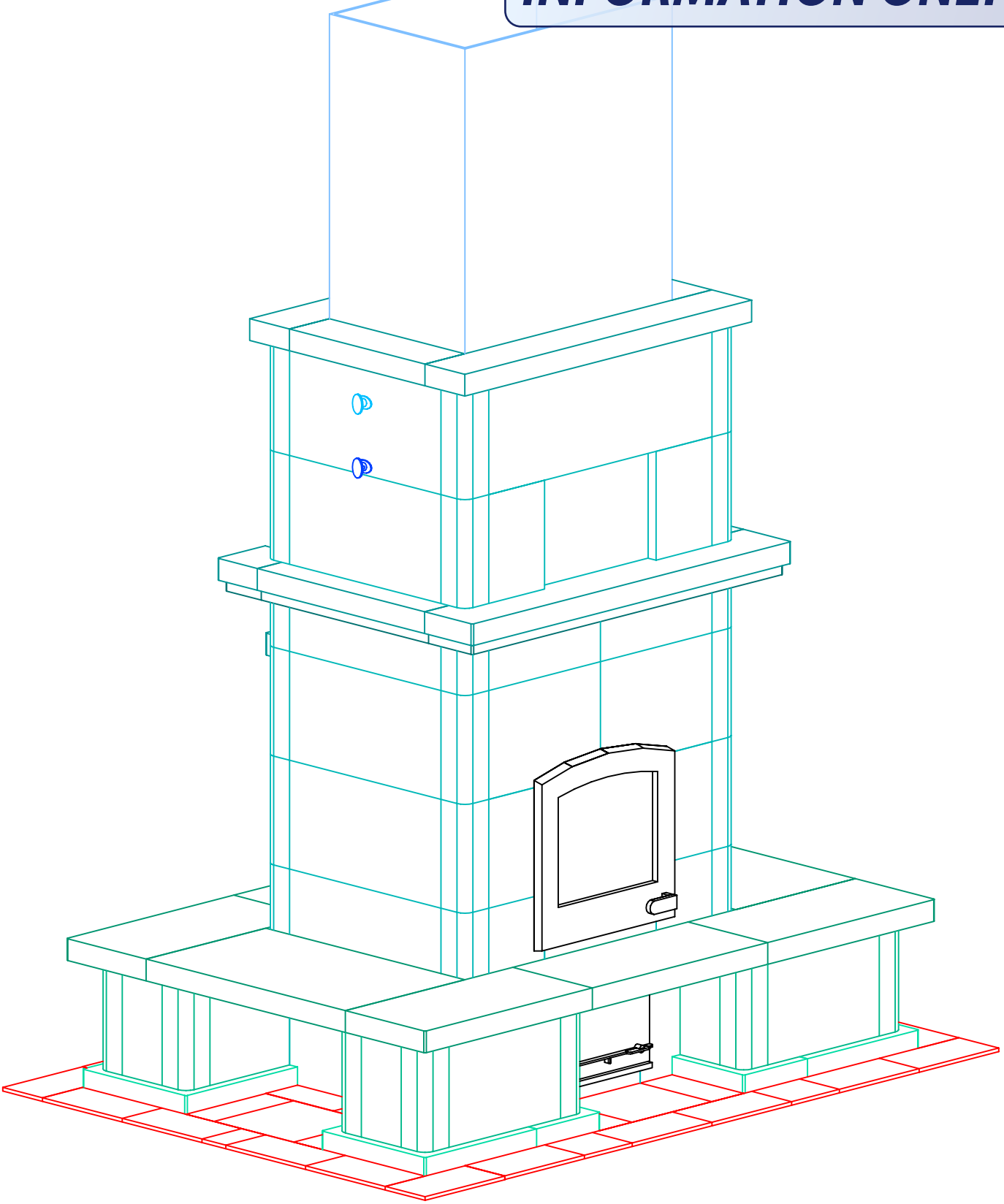

NOTE: Hearth Tiles CUT AND INSTALLED by others

TULIKIVI®	MID–ATLANTIC MASONRY HEAT McIntire Business Park Charlottesville, VA 22903 (434)979–9709 Fax 434–979–6416	PROJECT WURZER	CONTRACT 5262	VIEW PERSPECTIVE	PAGE 1
		MODEL TTU2700/5	DRAWN BY D.POWLEY	DATE 9/17/02	

Revision: 1	Date: 8/22/03	By: DPB

INFORMATION ONLY

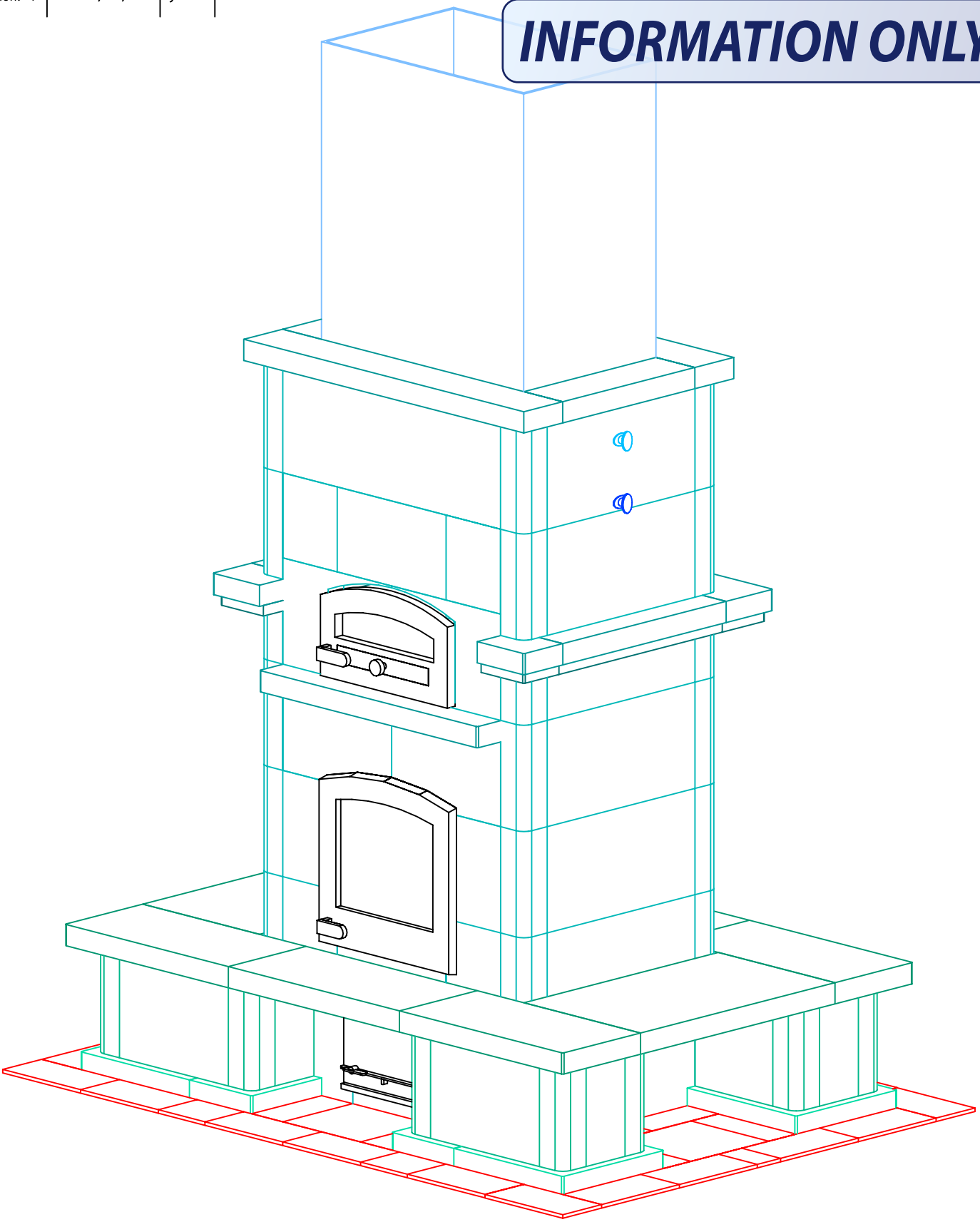

NOTE: Hearth Tiles CUT AND INSTALLED by others

TULIKIVI®	MID–ATLANTIC MASONRY HEAT McIntire Business Park Charlottesville, VA 22903 (434)979–9709 Fax 434–979–6416	PROJECT WURZER	CONTRACT 5262	VIEW BAKEOVEN	PAGE 2
		MODEL TTU2700/5	DRAWN BY D.POWLEY	DATE 9/17/02	

Revision: 1	Date: 8/22/03	By: DPB

INFORMATION ONLY

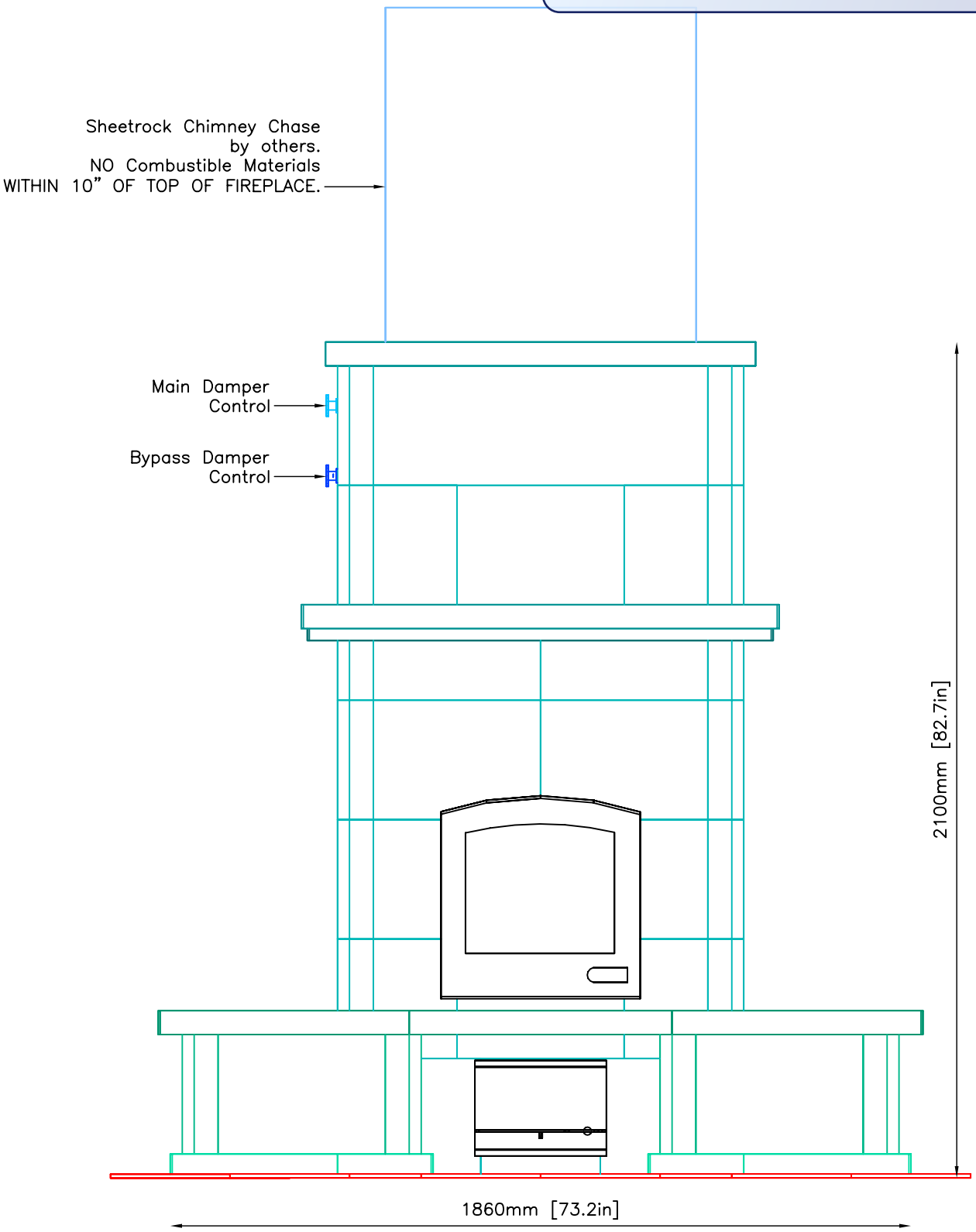

TULIKIVI®	MID–ATLANTIC MASONRY HEAT McIntire Business Park Charlottesville, VA 22903 (434)979–9709 Fax 434–979–6416	PROJECT WURZER	CONTRACT 5262	VIEW FRONT	PAGE 3
		MODEL TTU2700/5	DRAWN BY D.POWLEY	DATE 9/17/02	

Revision: 1	Date: 8/22/03	By: DPB

INFORMATION ONLY

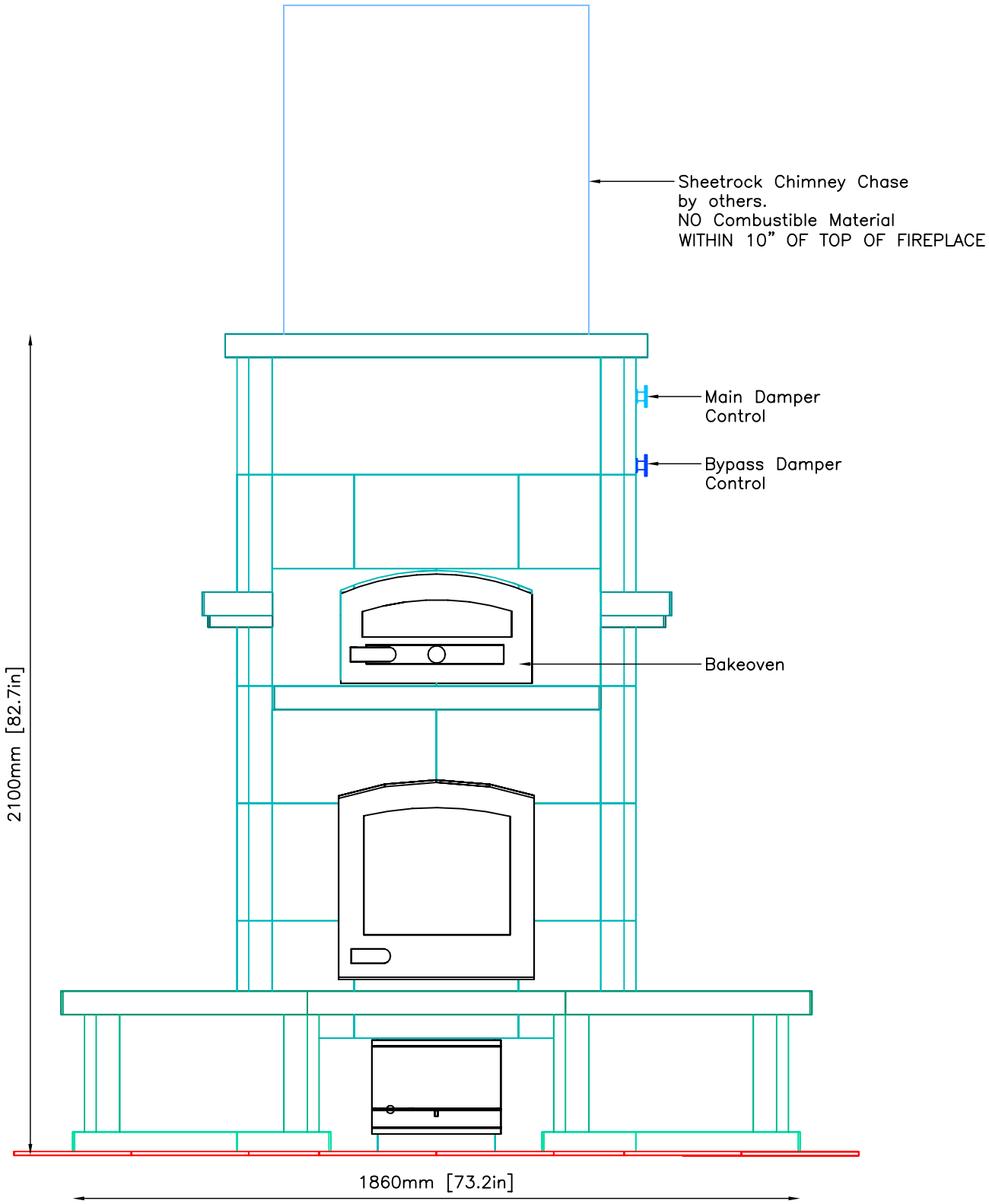

TULIKIVI®	MID–ATLANTIC MASONRY HEAT McIntire Business Park Charlottesville, VA 22903 (434)979–9709 Fax 434–979–6416	PROJECT WURZER	CONTRACT 5262	VIEW BAKEOVEN	PAGE 4
		MODEL TTU2700/5	DRAWN BY D.POWLEY	DATE 9/17/02	

Revision: 1	Date: 8/22/03	By: DPB

INFORMATION ONLY

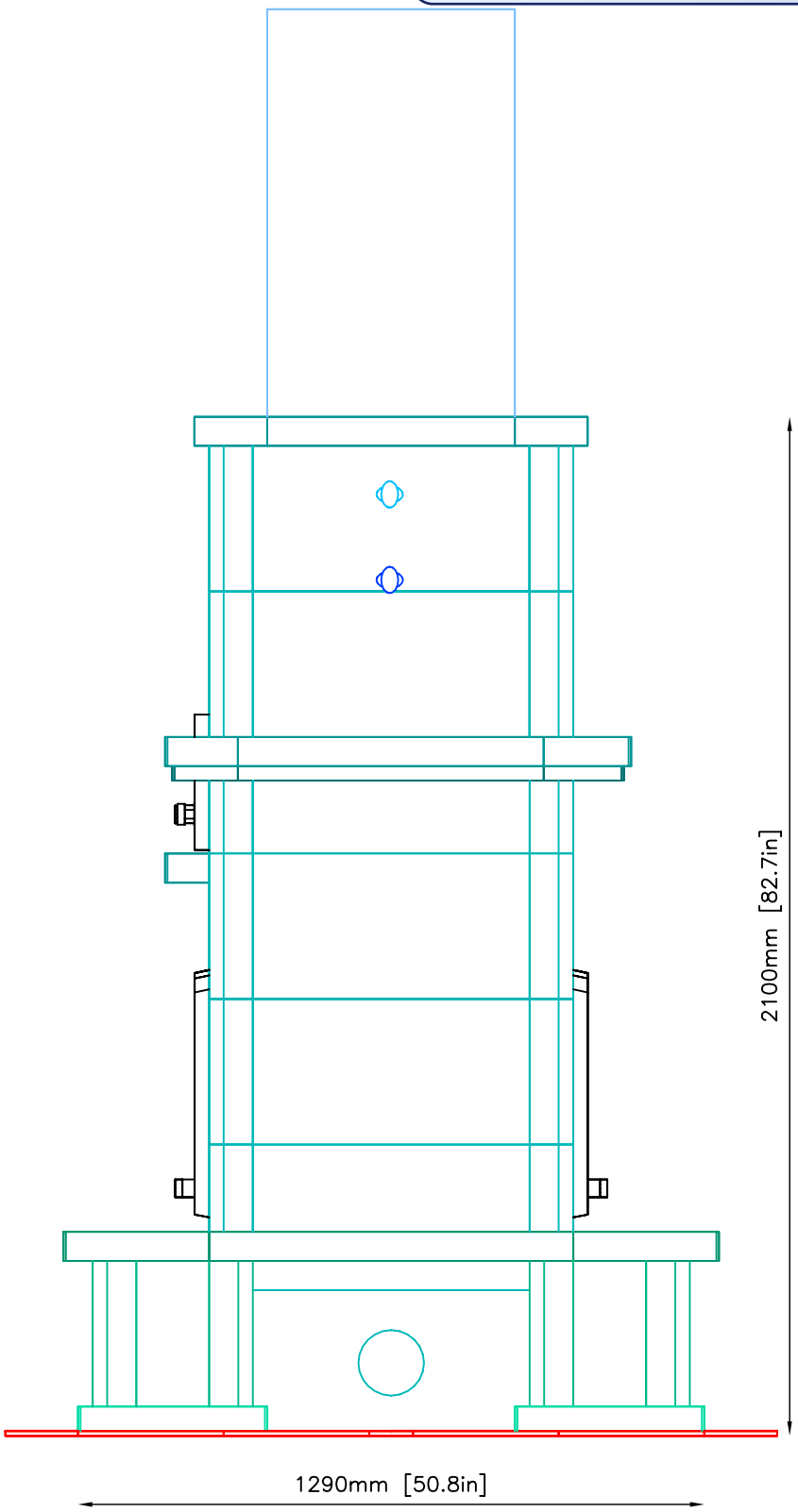

TULIKIVI®	MID–ATLANTIC MASONRY HEAT McIntire Business Park Charlottesville, VA 22903 (434)979–9709 Fax 434–979–6416	PROJECT WURZER	CONTRACT 5262	VIEW SIDE	PAGE 5
		MODEL TTU2700/5	DRAWN BY D.POWLEY	DATE 9/17/02	

Revision: 1	Date: 8/22/03	By: DPB

PLAN VIEW

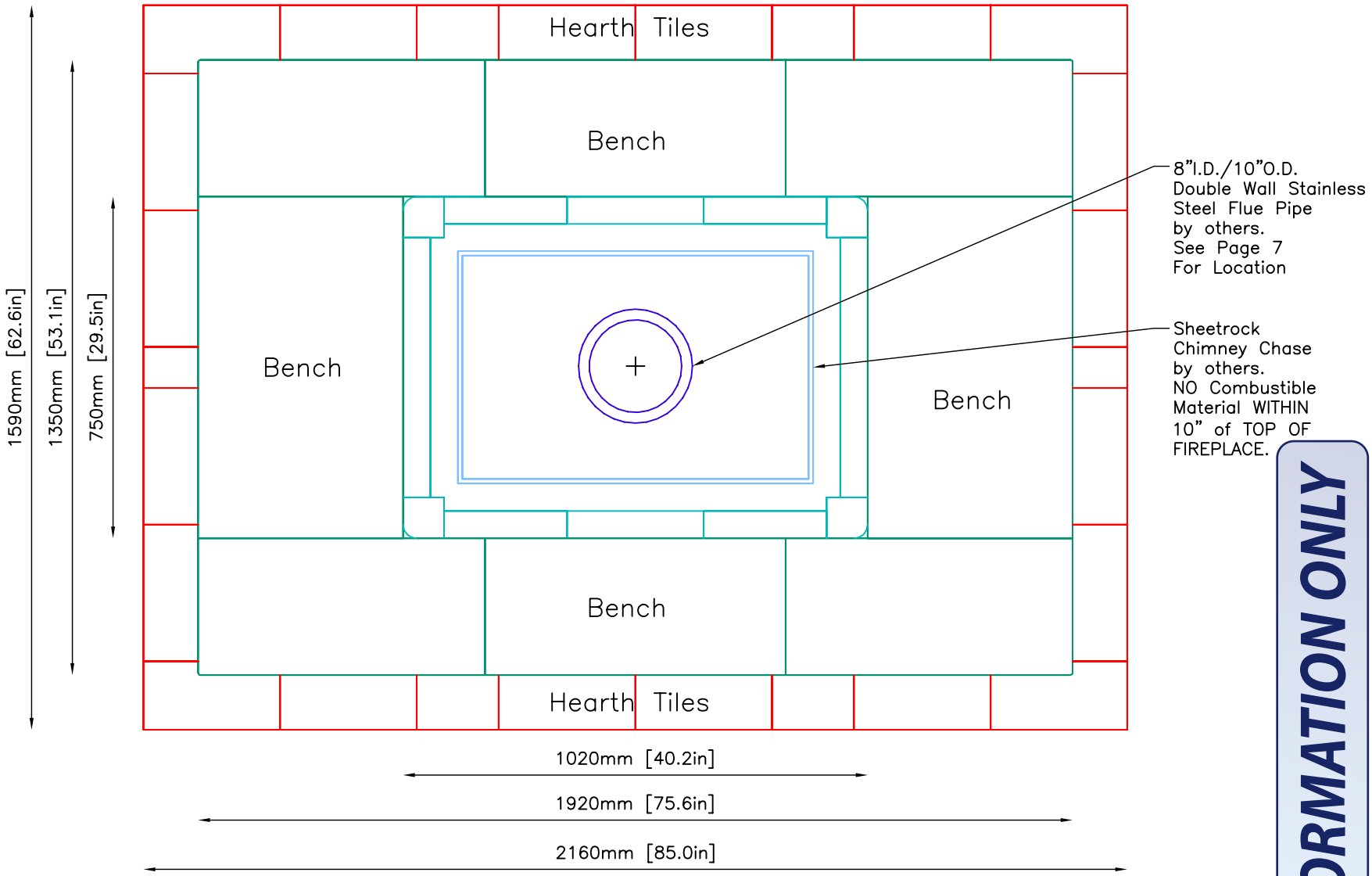

NOTE: Hearth Tiles CUT AND INSTALLED by others

INFORMATION ONLY

TULIKIVI®

MID-ATLANTIC MASONRY HEAT
McIntire Business Park
Charlottesville, VA 22903
(434)979-9709 Fax 434-979-6416

PROJECT	WURZER	CONTRACT	5262	VIEW	PLAN	PAGE	6
MODEL	TTU2700/5	DRAWN BY	D.POWLEY	DATE	9/17/02		

Revision: 1	Date: 8/22/03	By: DPB

FOUNDATION SLAB

Minimum 4" Thick Poured Concrete With Rebar 6"O.C.
Minimum Dimensions--2" from Base of Unit

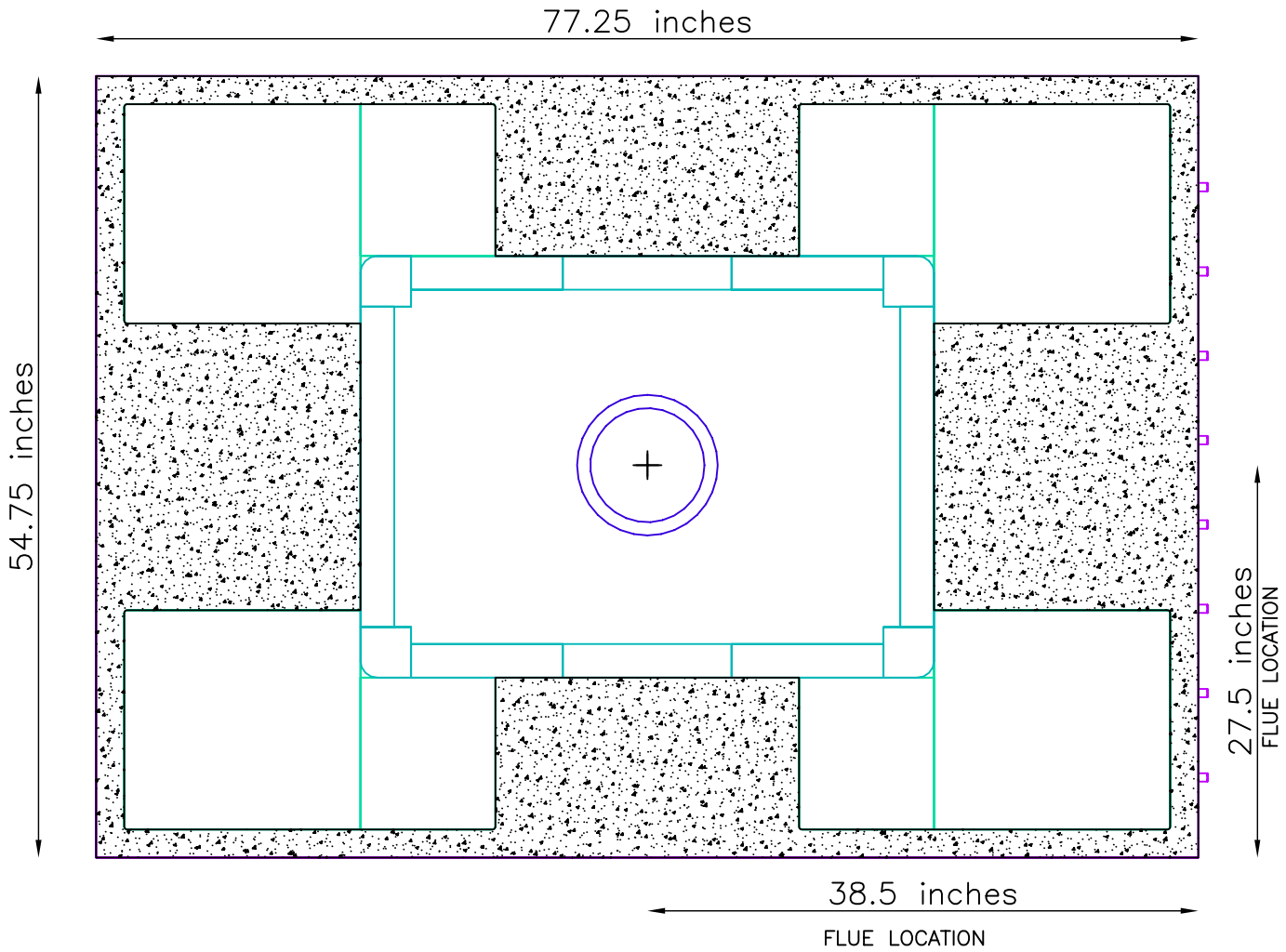

FLUE LOCATION:
FROM BOTTOM RIGHT CORNER of FOUNDATION SLAB
to CENTER OF FLUE PIPE: 27 ½" x 38 ½"

NOTE:
TOP OF FOUNDATION SLAB TO BE LEVEL AND FLUSH WITH SUB-FLOOR
Tolerances: +/- 1/8" No addition cost to adjust slab
+/- 1/4" $150.00-$200.00 additional cost to adjust slab
+/- 1/2" $500.00 additional cost to adjust slab

INFORMATION ONLY

UNIT WEIGHT: MINIMUM 10,000lbs.
Contractor is responsible for engineering foundation slab to support weight of fireplace.

TULIKIVI®	MID-ATLANTIC MASONRY HEAT 1229 Harris Street Suite 1 Charlottesville, VA 22903 (434)979-9709 Fax 434-979-6416	PROJECT WURZER	CONTRACT 5262	VIEW SUPPORT	PAGE 7
		MODEL TTU2700/5	DRAWN BY D.P.BYRAM	DATE: Originial Drawing 9/17/02	

Revision: 1	Date: 8/22/03	By: DPB

FOUNDATIN SLAB:
* MINIMUM 4" THICK WITH REBAR 6"O.C.
* NONCOMBUSTIBLE CEMENT BOARD under foundation slab (NOT PLYWOOD)

INFORMATION ONLY

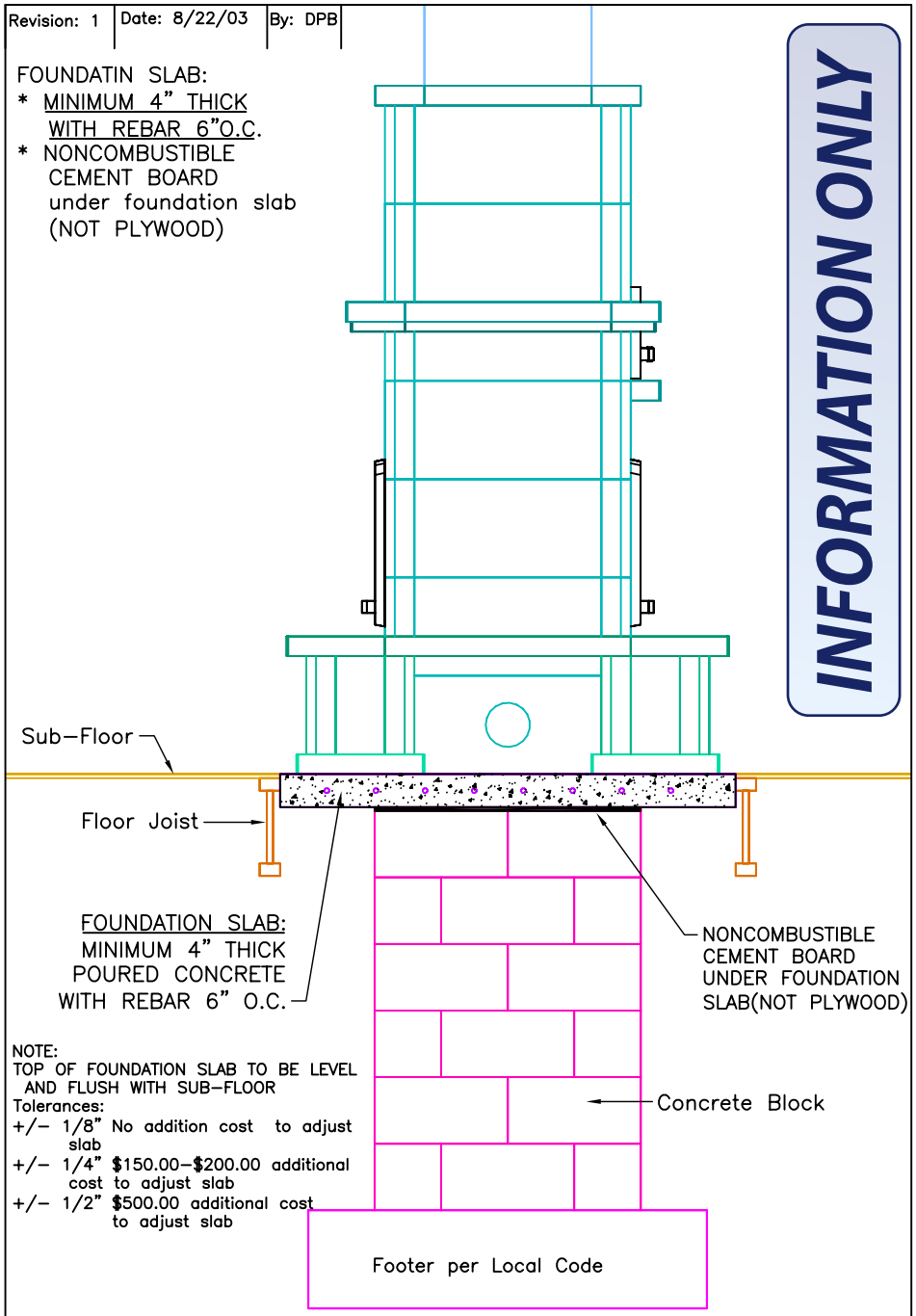

NOTE:
TOP OF FOUNDATION SLAB TO BE LEVEL AND FLUSH WITH SUB–FLOOR
Tolerances:
+/– 1/8" No addition cost to adjust slab
+/– 1/4" $150.00–$200.00 additional cost to adjust slab
+/– 1/2" $500.00 additional cost to adjust slab

UNIT WEIGHT: MINIMUM 10,000lbs.
Contractor is responsible for engineering foundation slab to support weight of fireplace.

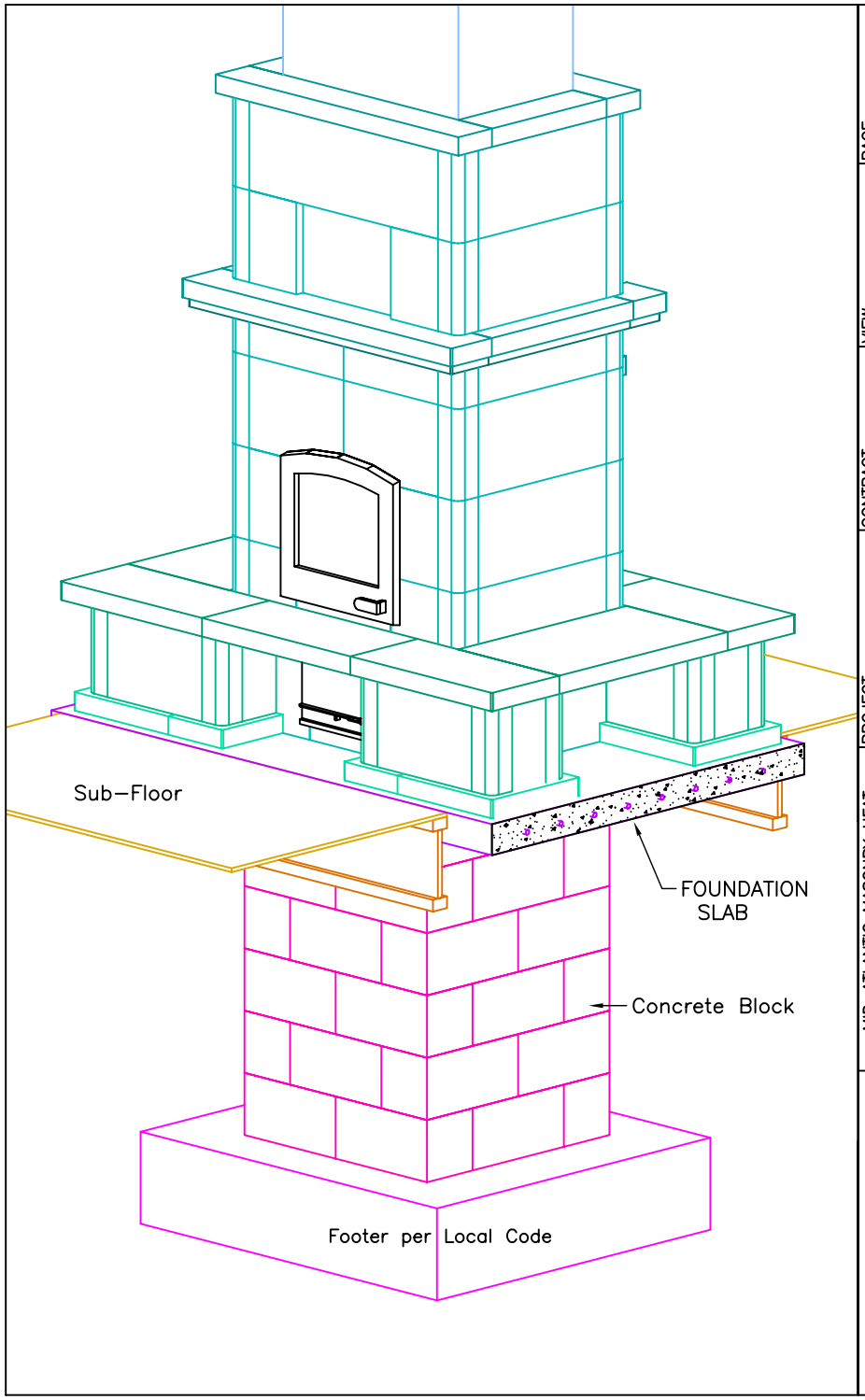

PAGE 8

VIEW Foundation Slab
DATE: Original Drawing 9/17/02

CONTRACT 5262
DRAWN BY D.P.BYRAM

PROJECT WURZER
MODEL TTU2700/5

MID–ATLANTIC MASONRY HEAT
McIntire Business Park
Charlottesville, VA 22903
(434)979–9709 Fax 434–979–6416

TULIKIVI®